Any unauthorized use of this drawing, copying or passing on to third parties requires the explicit approval of ebm-papst Mulfingen GmbH & Co. KG
Any violations of this shall be prosecuted in Civic and Penal Court!

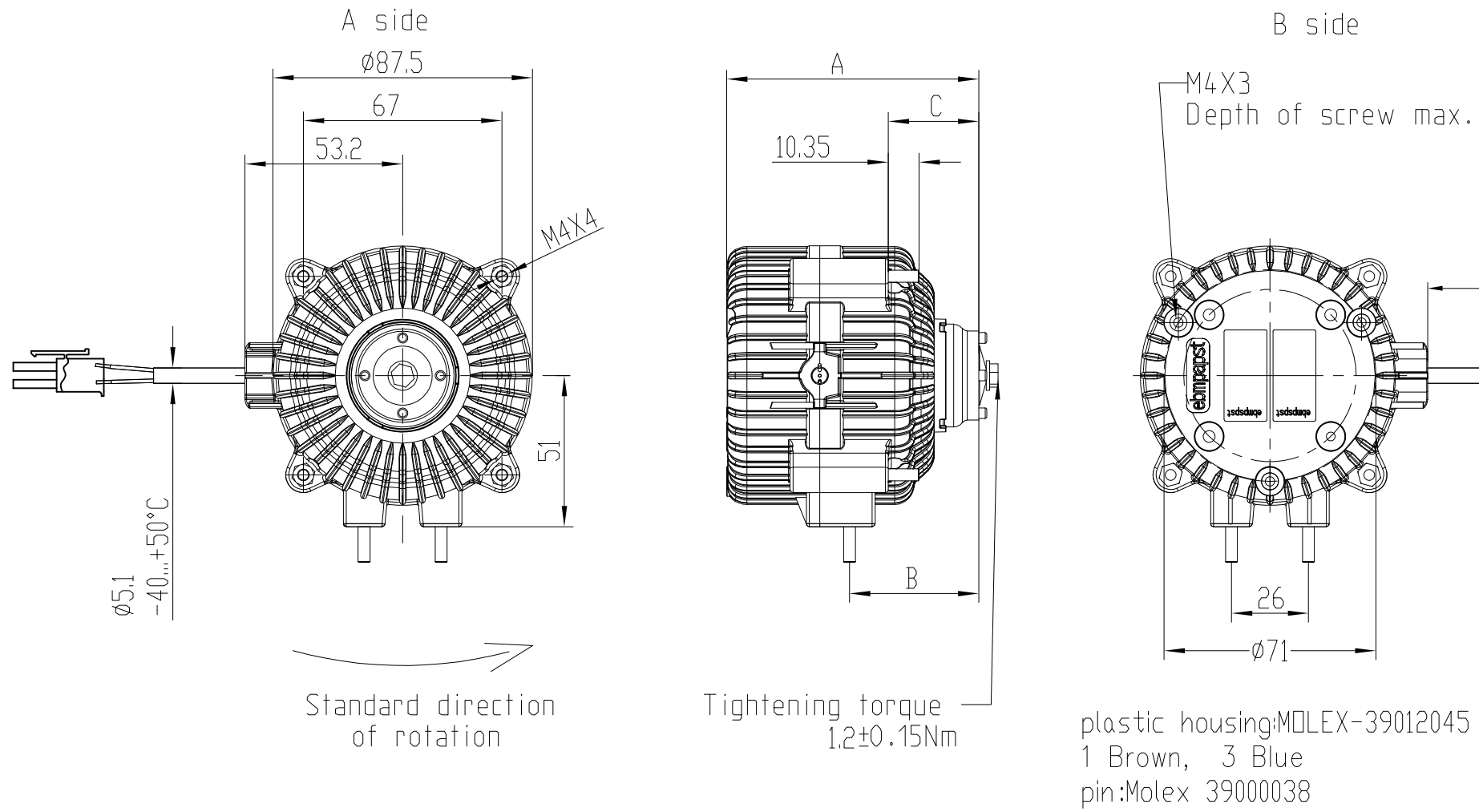

plastic housing:MOLEX-39012045
1 Brown, 3 Blue
pin:Molex 39000038

Tolerances ISO 2768 -mK -E	ebmpapst						
	ebm-papst Ventilator (ShangHai) CO.,Ltd						
Scale 1:1						Fit	Deviations
Size		Date	Name				
		Designed					
Distribution		Checked					
		CAD: iQC3612-040112-A07		Ind.	KM-Nr.	Date	Name
						Sheet 1 of 1	

Paper size: A3